MI-147nn
TMA Twin 2100/2600

*This photo is showing MI-14706

General Description

Microdata Telecom's TMA provides network operators with a cost effective solution that delivers up to 50% improvement in uplink throughput while reducing dropped connections up to 20%.

The lower interference achieved with Microdata Telecom TMA shifts the traffic to higher coding schemes which further improves network performance and capacity.

The PIM buffer effect of Microdata Telecom TMAs will enable profitable use of spectrum previously avoided due to PIM contamination.

Features & Benefits

- Active LNA on all bands
- Market leading PIM performance (-160 dBc across the product portfolio)
- Efficiently prepare your sites for future expansions
- Fully utilize the capabilities of your ultra-wideband antennas
- Diplexed BTS Port that enable antenna and feeder sharing
- Small and light for minimum visual impact
- Reduce tower loading with up to 75%
- Full AISG operation and RET (Remote Electrical Tilt) antenna support

Specifications

Downlink (TX) Path	**2100**	**2600**
Frequency Band	2110 - 2170 MHz	2620 - 2690 MHz
Insertion Loss	0.30 dB*	0.35 dB*
Return Loss	≥ 18 dB	≥ 18 dB
Continuous Average Power	200 W (53 dBm)	200 W (53 dBm)
Intermodulation, 2x43 dBm TX Carrier BTS port	-125 dBm in RX band, ANT port	-117 dBm in RX band, ANT port
Uplink (RX) Path		
Frequency Band	1920 - 1980 MHz	2500 -2570 MHz
Gain	12 dB nominal	12 dB nominal
Return Loss	≥ 16 dB	≥ 16 dB
Noise Figure	1.4 dB*	1.5 dB*
Insertion Loss, Bypass mode	1.9 dB*	2.0 dB*
Return Loss, Bypass mode	≥ 12 dB	≥ 12 dB
Output IP3	25 dBm*	25 dBm*
Power Supply and Alarm		**AISG - Mode**
DC		24 V DC nominal (8 - 31 V DC)
Power		< 4 W
Alarm		AISG 2.0 (TWO mode default)
Environmental		
Operating Temperature Range	-40 to +65°C | -40 to +149°F	
Operation	ETS 300 019-1-4 Class 4.1E	
Storage	ETS 300 019-1-1 Class 1.2	
Ingress Protection	IP67	
Lightning Protection	10 kA 8/20 µs (ANT, BTS) 5 kA common mode (RET port)	
Miscellaneous		
EMC	EN 301 489-23	
Safety standards	EN 60950	
MTBF	1 Mh/TMA min.	
Mechanical		
Dimensions (WxHxD)	154X184X110 mm | 6.06x7.24x4.33 in	
Connectors (See Selection Guide)	2x ANT, 2x BTS, AISG Female 8 pin circular	
Mounting (Supporter Pole Diameter: 40-140mm)	Wall mount bracket	
Volume	3.1 l	
Weight	4.3 kg | 9.48 lb	
Colour	NCS 1502-R	
Bracket	Included	
Shipping Information		
Shipping weight (Gross weight, including packaging)	4.9 Kg | 10.80 lb	
Carton Size	TBD	
Carton Qty/Pallet	39	

* typical

Microdata Telecom Group, P.O. Box 2871, SE-187 28 Täby, SWEDEN
Phone: +46 8 477 77 70, Fax: +46 8 477 77 80
www.microdatatelecom.com, sales@microdata.se

MI-147nn
TMA Twin 2100/2600

Selection Guide

Model number	AISG			Connector (F)		
	Common Mode		Indepe-dent	7/16	4.3-10	AISG
MI-14701	X	ONETWO[1]		X		1x
MI-14702	X	TWOTWO[2]		X		1x
MI-14706			X	X		2x
MI-14731	X	ONETWO[1]			X	1x
MI-14732	X	TWOTWO[2]			X	1x
MI-14736			X		X	2x

[1]ONETWO: the TMA is identified as 1 logic unit with 2 subunits
[2]TWOTWO: the TMA is identified as 2 logic units with 2 subunits each

Block Diagram

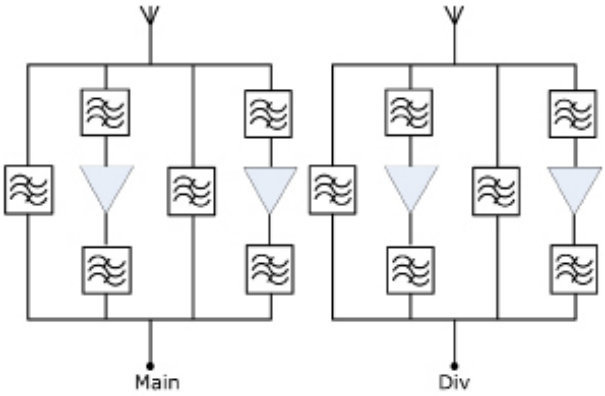

Mechanical Drawing

*This picture is showing MI-14701

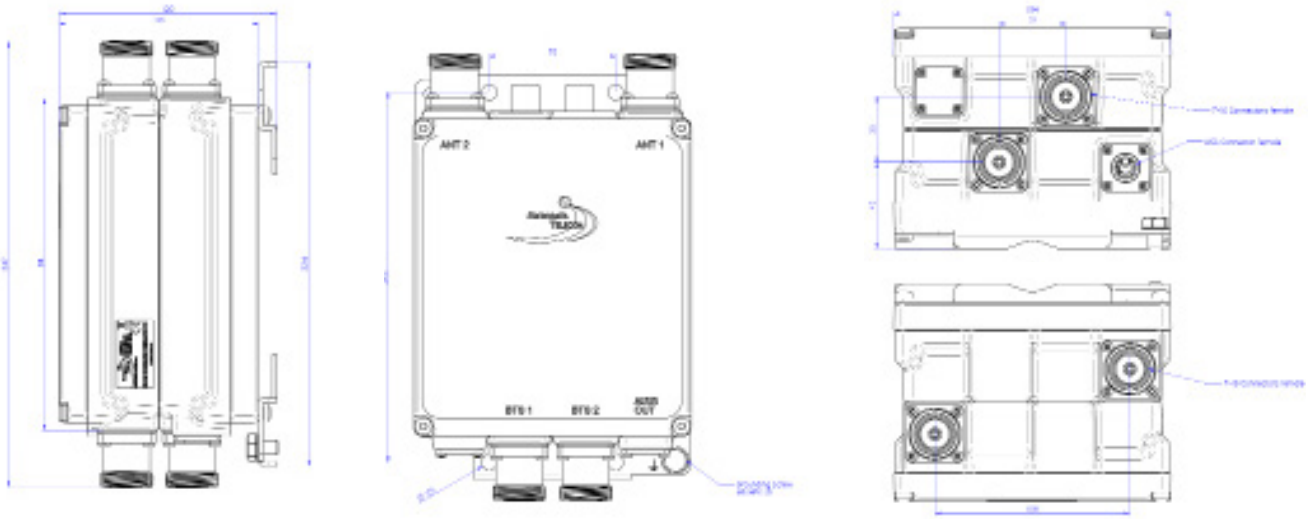

Microdata Telecom Group, P.O. Box 2871, SE-187 28 Täby, SWEDEN
Phone: +46 8 477 77 70, Fax: +46 8 477 77 80
www.microdatatelecom.com, sales@microdata.se